ANTISTATIC MOISTURE BARRIER BAGS

WHS-B Antistatic Moisture Barrier Bags are engineered to provide top-tier protection for wafers and sensitive electronics during storage and transport. These multi-layer bags offer advanced defense against moisture, static electricity, and contamination, ensuring product safety in demanding environments.

The multi-layer construction features:

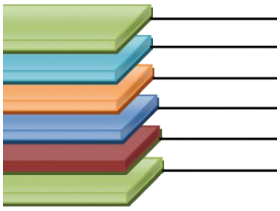

- Anti-static Layer
- Polyester (12 um)
- Aluminum foil (7 um)
- Nylon (15 um)
- Polyethylene (115 um)
- Anti-static Layer

For strength, with an additional anti-static layer for complete ESD protection. This ensures products are shielded from environmental factors and electrostatic discharge while resisting punctures.

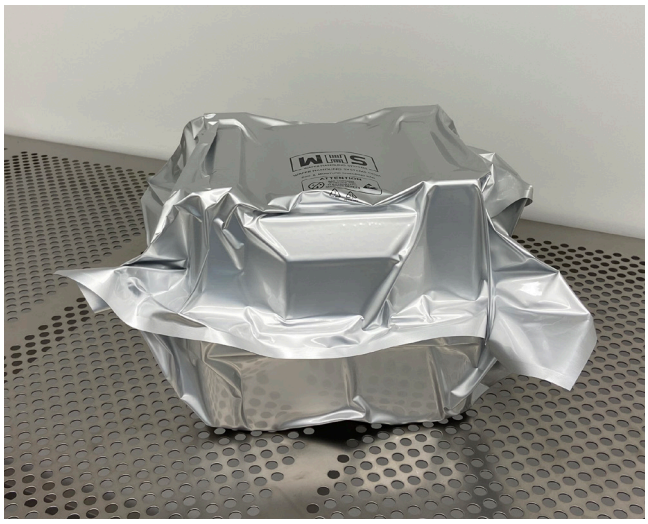

WHS-B-S600E vacuum sealer

Thanks to their low moisture transmission rate, WHS-B bags allow for extended storage without risk of damage. Larger sizes feature a block-bottom design, reducing folds and minimizing contamination risks.

Designed for compatibility with various wafer cassette sizes, WHS-B bags are ideal for cleanroom use due to their abrasion-resistant materials. WHS offers short lead times and small order quantities to meet customer needs. With six standard sizes and customizable options, WHS-B bags provide flexible solutions for high-quality storage and shipping Manufactured in an ISO9001 certified facility and CE certified, WHS-B bags meet international standards.

Ensuring quality and safety, WHS-B bags provide a cost-effective solution for safeguarding wafers and electronics in the semiconductor industry. MBB bags comply with ISO 3 (Class 1 FS209E) standards.

FEATURES AND ADVANTAGES

- Multi-layer construction providing antistatic, moisture, and puncture resistance.
- Made from anti-static polyester, aluminum, nylon, and polyethylene.
- Abrasion-resistant materials make them ideal for cleanroom environments.
- Six standard sizes with custom size options available
- Short lead times and small order quantities offered

REV032025

WHS WAFER HANDLING SYSTEMS
www.sps-international.com
sales@sps-international.com
www.waferhandlingsystems.com
sales@waferhandlingsystems.com

ANTISTATIC MOISTURE BARRIER BAGS

ELECTRICAL PROPERTY PARAMETERS	TEST METHOD	UNIT	RANGE	RESULT
Inner surface resistance	ANSI/ESD STM11.11-2015	Ohm	10^{6-11}	10^{9-10}
Outer surface resistance				10^{9-10}
ESD shielding	ANSI/ESD S541-2009	nJ	<20	0.48-0.58
Electrostatic decay time	SJ/T 11587-2016 (±1000~±100V)	S	≤2	0.1

PHYSICAL PROPERTY PARAMETERS		TEST METHOD	UNIT	RESULT
Tensile strength	MD	GB/T 39588-2020	Mpa	51.13-53.47
	TD			46.70-50.60
Tensile strength	MD		%	67.99-78.10
	TD			79.21-109.07
Puncture strength	PE side up		N	96.86-112.55
	PE side down			80.38-94.29
Moisture vapor transmission rate (MVTR) (38°C, 90 % RH)		ASTM F1249-13	g/(100in2.24h)	0.0003

ORDERING INFORMATION

WHS-B -	1001

CODE	MODEL
1001	1001 Small moisture barrier bag (ESD) | Inner size: 150 x 185 mm
1002	1002 Small moisture barrier bag (ESD) | Inner size: 180 x 230 mm
3002	3002 Small LDPE bag | Inner size: 180 x 230 mm
2003	2003 Large moisture barrier bag (ESD) | Inner size: 260 x 320 mm
3003	3003 Large LDPE bag| Inner size: 260 x 320 mm
2004	2004 Large moisture barrier bag (ESD) | Inner size: 380 x 420 mm
3004	3004 Large LDPE bag | Inne rsize: 380 x 420 mm
2005	2005 Large moisture barrier bag (ESD) | Inner size: 550 x 590 mm
3005	3005 Large LDPE bag | Inner size: 550 x 590 mm
2006	2006 Large moisture barrier bag (ESD) | Inner size: 770 x 650 x 175 mm
3006	3006 Large LDPE bag | Inner size: 770 x 650 x 175 mm
2007	2007 Large moisture barrier bag (ESD) | Inner size: 620 x 650 x 175 mm

REV032025

PRODUCT COMPATIBILITY

WHS	B	MATERIAL BAGS PET OR LDPE	INNER SIZE
WHS-	B-	**1** = 0,08 mm PET (12 µm), Al (7 µm), NY (15 µm) & PE (45 µm)	**002** = 180 x 230 mm
		3 = 0,06 mm LDPE (60 µm)	
WHS-	B-	**2** = 0,15 mm PET (12 µm), Al (7 µm), NY (15 µm) & PE (115 µm)	**003** = 260 x 320 mm
		3 = 0,06 mm LDPE (60 µm)	
WHS-	B-	**2** = 0,15 mm PET (12 µm), Al (7 µm), NY (15 µm) & PE (115 µm)	**004** = 380 x 420 mm
		3 = 0,06 mm LDPE (60 µm)	
WHS-	B-	**2** = 0,15 mm PET (12 µm), Al (7 µm), NY (15 µm) & PE (115 µm)	**005** = 550 x 590 mm
		3 = 0,06 mm LDPE (60 µm)	
WHS-	B-	**2** = 0,15 mm PET (12 µm), Al (7 µm), NY (15 µm) & PE (115 µm)	**006** = 770 x 650 x 175 mm
		3 = 0,06 mm LDPE (60 µm)	
WHS-	B-	**2** = 0,15 mm PET (12 µm), Al (7 µm), NY (15 µm) & PE (115 µm)	**007** = 620 x 650 x 175 mm

ITEM	SHIPPING PRODUCTS	EPAK PARTNUMBERS
WHS-B-1002/ WHS-B-3002	Coin-style shippers for 1" (25 mm) up to 5" (125 mm) wafers	eWB0091, eWB0021, eWB0022, eWB0024, eWB0060
WHS-B-1002/ WHS-B-3002	Vacuum formed wafer shipping box for 1" (25 mm) wafers	eVT0404
WHS-B-2003/ WHS-B-3003	Coin-style shipper for 6" (150 mm) wafers	eWB0025
WHS-B-2003/ WHS-B-3003	Vacuum formed wafer shipping box for 2" (50 mm) wafers	eVT0241
WHS-B-2003/ WHS-B-3003	Wafer shipping boxes for 1" (25 mm) up to 3" (76 mm) wafers	eWB0302, eWB0028, eWB0029
WHS-B-2003/ WHS-B-3003	Single-wafer shipper for 6" (150 mm) wafers	eWB0017
WHS-B-2003/ WHS-B-3003	Hoop ring shipper for 140 mm/152 mm	eVT0336, eWB0305
WHS-B-2003/ WHS-B-3003	Vacuum formed wafer shipping box for 3" (76 mm) wafers	eVT0294
WHS-B-2003/ WHS-B-3003	Wafer jar for 4" (100 mm) wafers	eWB0044, eWB0001

REV032025

WHS WAFER HANDLING SYSTEMS
www.sps-international.com
sales@sps-international.com
www.waferhandlingsystems.com
sales@waferhandlingsystems.com

PRODUCT COMPATIBILITY

ITEM	SHIPPING PRODUCTS	EPAK PARTNUMBERS
WHS-B-2004/ WHS-B-3004	eLX wafer canister for 6″ (150 mm) and 8″ (200 mm) wafers	eWB0435, eWB0086, eWB0018
WHS-B-2004/ WHS-B-3004	Standard wafer canister for 6″ (150 mm) and 8″ (200 mm) wafers	eWB0102, eWB0075
WHS-B-2004/ WHS-B-3004	Wafer jar internal for 8″ (200 mm) wafers	eWB0010
WHS-B-2004/ WHS-B-3004	Single-wafer shipper for 8″ (200 mm) wafers	eWB0016
WHS-B-2004/ WHS-B-3004	Vacuum formed single wafer shipper for 8″ (200 mm) wafers	eVT1605
WHS-B-2004/ WHS-B-3004	Hoop ring shipper for 195/210, 170/186 & 225/241 mm wafers	eVT0289, eVT0939
WHS-B-2004/ WHS-B-3004	Single flex frame shipper for DISCO DTF 2-6-1	eVT2253
WHS-B-2004/ WHS-B-3004	ePRO wafer shipping box for 4″ (100 mm) wafers	eWB0253
WHS-B-2004/ WHS-B-3004	Vacuum formed wafer shipper box for 4″ (100 mm) and 6″ (150 mm) wafers	eVT0736, eVT0293
WHS-B-2005/ WHS-B-3005	Vacuum formed wafer shipping box for 12″ (300 mm) wafers	eVT1415
WHS-B-2005/ WHS-B-3005	Wafer jar for 12″ (300 mm) wafers	eWB0054
WHS-B-2005/ WHS-B-3005	eLX wafer canister for 8″ (200 mm) and 12″ (300 mm) wafers	eWB0026, eWB0516
WHS-B-2005/ WHS-B-3005	ePRO wafer shipping box for 6″ (150 mm) wafers	eWB0209
WHS-B-2005/ WHS-B-3005	Single flex frame shipper for 8″ (200 mm) and 12″ (300 mm) wafers	eVT1663, eVT0320
WHS-B-2005/ WHS-B-3005	Single-wafer shipper injection molded for 12″ (300 mm) wafers	eWB0053
WHS-B-2006/ WHS-B-3006	Flex frame multi shipper for 12″ (300 mm) wafers	eWB0195
WHS-B-2006/ WHS-B-3006	eFOUP for 12″ (300 mm) wafers	eWB0685
WHS-B-2007/ WHS-B-3005	eLX wafer canister for 12″ (300 mm) wafers	eWB0371
WHS-B-2007/ WHS-B-3005	Flex frame multi shipper for 6″ (150 mm) and 8″ (200 mm) wafers	eWB0591, eWB0214
WHS-B-2007/ WHS-B-3005	ePRO wafer shipping box for 8″ (200 mm) wafers	eWB0283

REV032025

REV032025

NO.	ITEM		SPECIFICATION
1	Size	Outer	170*195 mm
		Inner	150*185 mm
2	Material	Thickness	0.08 mm
		Structure	PET/AL/NY/PE
3	Color		Matt Silver
4	Style		Open-ended
5	Opening		Short side
6	Sealing Side		Three in 10mm
7	Resistance	Outer	10^{8-11} ohm
		Inner	10^{8-11} ohm
8	Printing Techniques		Under-film Techniques
			Black, one side
9	Printing Mold No.		24002023572
10	Tolerance	Outer Size	±3mm
		Thickness	±10%
		Printing position	±8mm
Date		13-Mar.-2025	
Maker		Mengru Li	
Product Name		ESD moisture barrier bag	
Customer P.N.		WHS-B-1001	
Drawing No.		DR-SP-ES-12273	
Version		A/0	

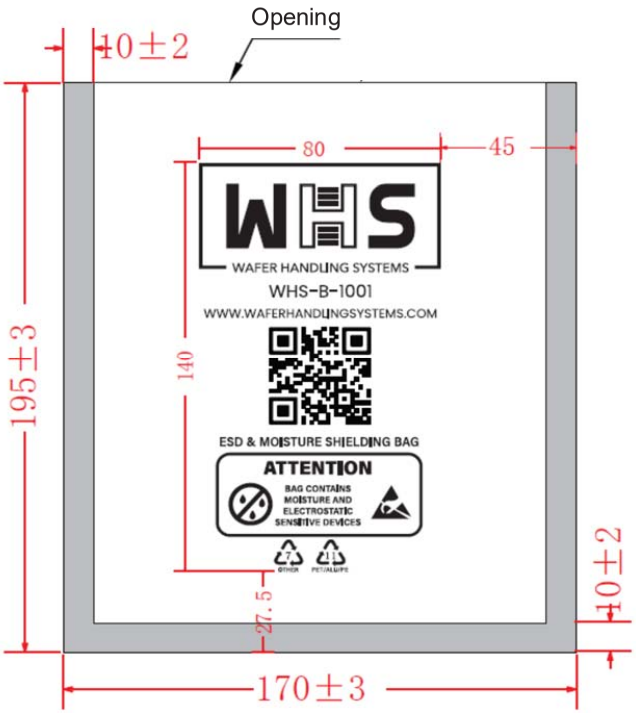

WAFER HANDLING SYSTEMS
www.sps-international.com
sales@sps-international.com
www.waferhandlingsystems.com
sales@waferhandlingsystems.com

NO.	ITEM		SPECIFICATION
1	Size	Outer	200*240 mm
		Inner	180*230 mm
2	Material	Thickness	0.08 mm
		Structure	PET/AL/NY/PE
3	Color		Matt Silver
4	Style		Open-ended
5	Opening		Short side
6	Sealing Side		Three in 10mm
7	Resistance	Outer	10^{8-11} ohm
		Inner	10^{8-11} ohm
8	Printing Techniques		Under-film Techniques
			Black, one side
9	Printing Mold No.		24002023573
10	Tolerance	Outer Size	±3mm
		Thickness	±10%
		Printing position	±8mm
Date		13-Mar.-2025	
Maker		Mengru Li	
Product Name		ESD moisture barrier bag	
Customer P.N.		WHS-B-1002	
Drawing No.		DR-SP-ES-12274	
Version		A/0	

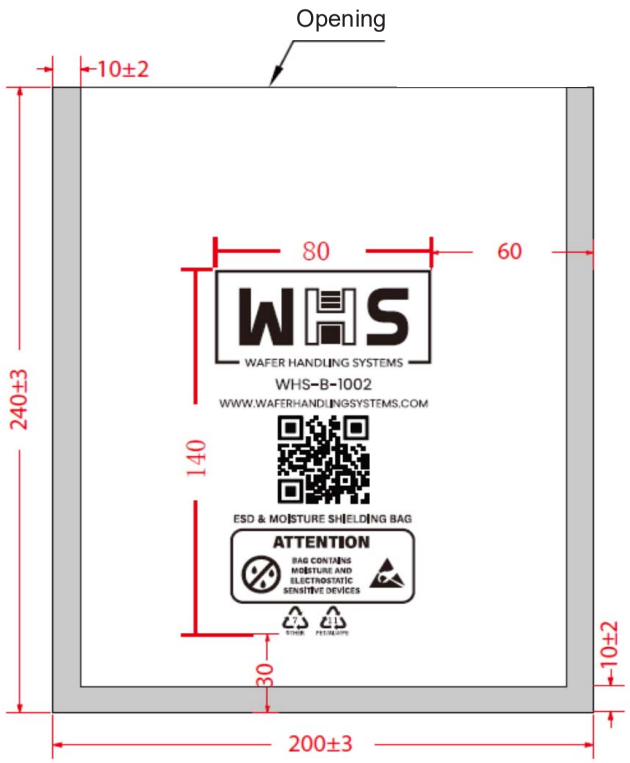

REV032025

NO.	ITEM		SPECIFICATION
1	Size	Outer	280*330 mm
		Inner	260*320 mm
2	Material	Thickness	0.15 mm
		Structure	PET/AL/NY/PE
3	Color		Matt Silver
4	Style		Open-ended
5	Opening		Short side
6	Sealing Side		Three in 10mm
7	Resistance	Outer	10^{8-11} ohm
		Inner	10^{8-11} ohm
8	Printing Techniques		Under-film Techniques
			Black, one side
9	Printing Mold No.		24002023574
10	Tolerance	Outer Size	±3mm
		Thickness	±10%
		Printing position	±8mm
Date		13-Mar.-2025	
Maker		Mengru Li	
Product Name		ESD moisture barrier bag	
Customer P.N.		WHS-B-2003	
Drawing No.		DR-SP-ES-12275	
Version		A/0	

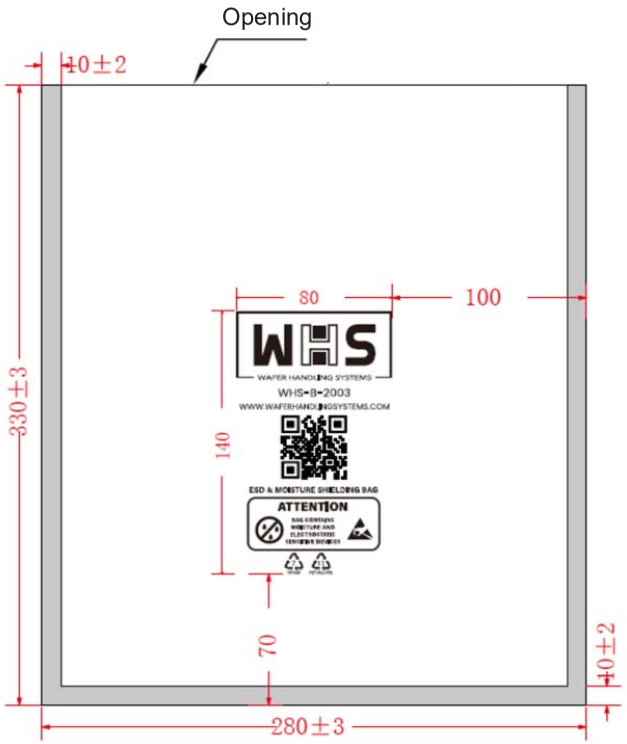

WAFER HANDLING SYSTEMS
www.sps-international.com
sales@sps-international.com
www.waferhandlingsystems.com
sales@waferhandlingsystems.com

NO.	ITEM		SPECIFICATION
1	Size	Outer	400*430 mm
		Inner	380*420 mm
2	Material	Thickness	0.15 mm
		Structure	PET/AL/NY/PE
3	Color		Matt Silver
4	Style		Open-ended
5	Opening		Short side
6	Sealing Side		Three in 10mm
7	Resistance	Outer	10^{8-11} ohm
		Inner	10^{8-11} ohm
8	Printing Techniques		Under-film Techniques
			Black, one side
9	Printing Mold No.		24002023575
10	Tolerance	Outer Size	±5mm
		Thickness	±10%
		Printing position	±8mm
Date		13-Mar.-2025	
Maker		Mengru Li	
Product Name		ESD moisture barrier bag	
Customer P.N.		WHS-B-2004	
Drawing No.		DR-SP-ES-12276	
Version		A/0	

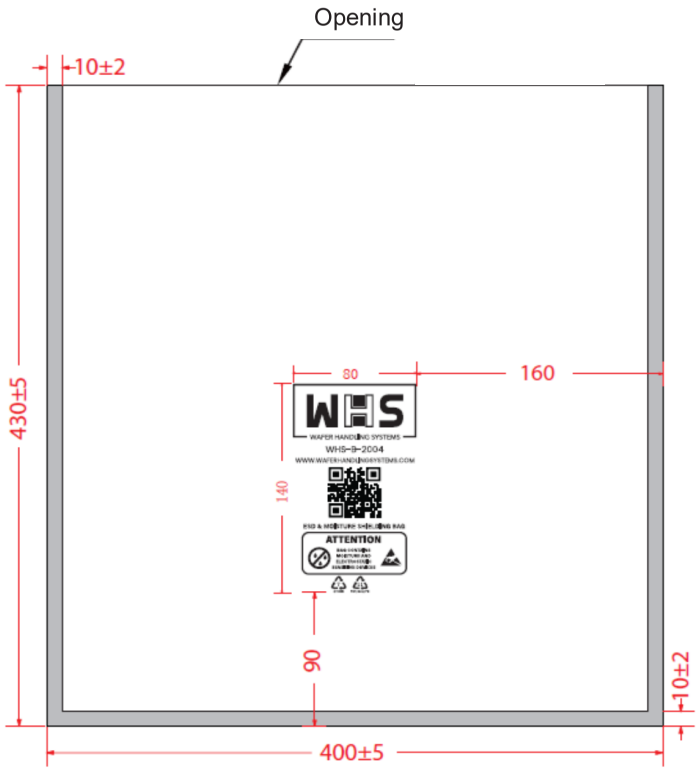

REV032025

NO.	ITEM		SPECIFICATION
1	Size	Outer	570*600 mm
		Inner	550*590 mm
2	Material	Thickness	0.15 mm
		Structure	PET/AL/NY/PE
3	Color		Matt Silver
4	Style		Open-ended
5	Opening		Short side
6	Sealing Side		Three in 10mm
7	Resistance	Outer	10^{8-11} ohm
		Inner	10^{8-11} ohm
8	Printing Techniques		Under-film Techniques
			Black, one side
9	Printing Mold No.		24002023576
10	Tolerance	Outer Size	±5mm
		Thickness	±10%
		Printing position	±8mm
Date		13-Mar.-2025	
Maker		Mengru Li	
Product Name		ESD moisture barrier bag	
Customer P.N.		WHS-B-2005	
Drawing No.		DR-SP-ES-12277	
Version		A/0	

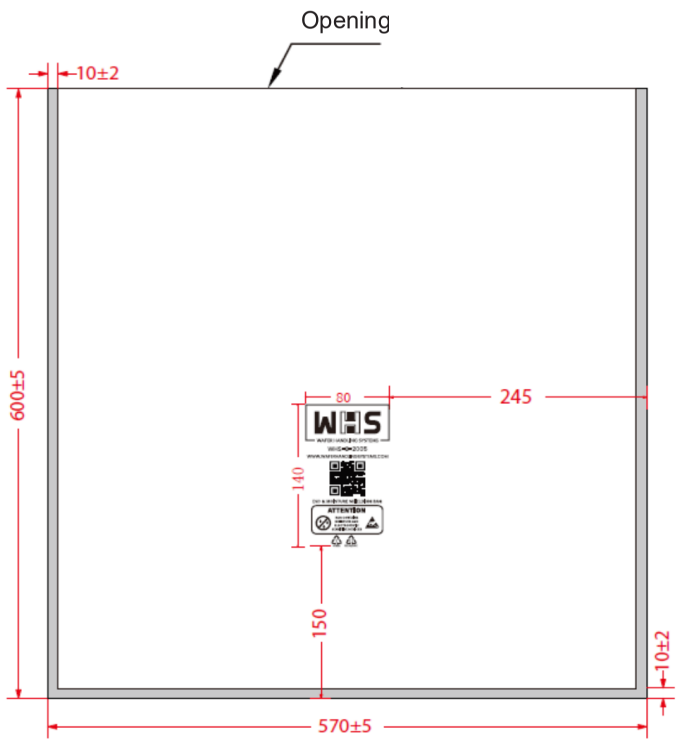

WAFER HANDLING SYSTEMS
www.sps-international.com
sales@sps-international.com
www.waferhandlingsystems.com
sales@waferhandlingsystems.com

NO.	ITEM		SPECIFICATION
1	Size	Outer	790*(660+185*2) mm
		Inner	770*(650+175*2) mm
2	Material	Thickness	0.15 mm
		Structure	PET/AL/NY/PE
3	Color		Matt Silver
4	Style		Bottom Folded
5	Opening		Long side
6	Sealing Side Width		10mm
7	Resistance	Outer	10^{8-11} ohm
		Inner	10^{8-11} ohm
8	Printing Techniques		Under-film Techniques
			Black, one side
9	Printing Mold No.		24002023577
10	Tolerance	Outer Size	±5mm
		Thickness	±10%
		Printing position	±8mm
Date		13-Mar.-2025	
Maker		Mengru Li	
Product Name		ESD MBB with folded bottom	
Customer P.N.		WHS-B-2006	
Drawing No.		DR-SP-ES-12278	
Version		A/0	

WAFER HANDLING SYSTEMS
WHS-B-2006
WWW.WAFERHANDLINGSYSTEMS.COM

ESD & MOISTURE SHIELDING BAG

ATTENTION
BAG CONTAINS MOISTURE AND ELECTROSTATIC SENSITIVE DEVICES

7 OTHER 11 PET/ALU/PE

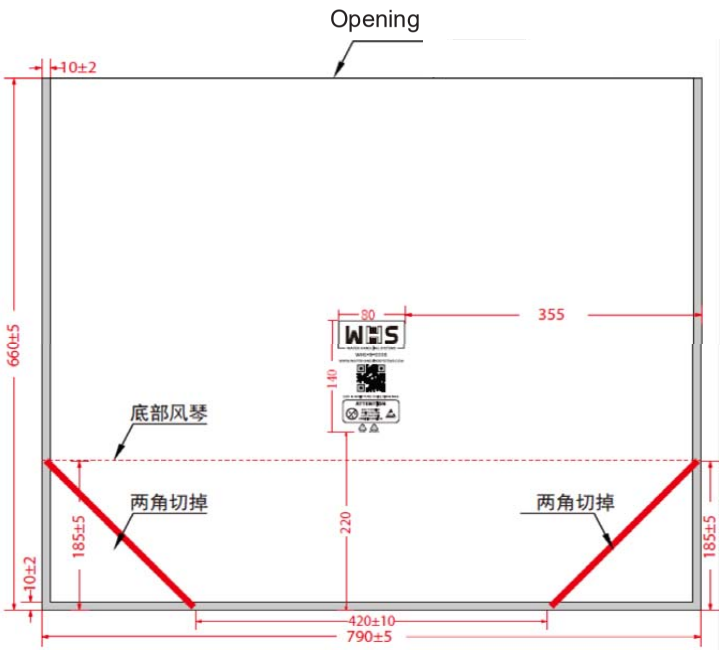

REV032025

REV032025

NO.	ITEM		SPECIFICATION
1	Size	Outer	640*(660+185*2) mm
		Inner	620*(650+175*2) mm
2	Material	Thickness	0.15 mm
		Structure	PET/AL/NY/PE
3	Color		Matt Silver
4	Style		Bottom Folded
5	Opening		Short side
6	Sealing Side Width		10mm
7	Resistance	Outer	10^{8-11} ohm
		Inner	10^{8-11} ohm
8	Printing Techniques		Under-film Techniques
			Black, one side
9	Printing Mold No.		24002023535
10	Tolerance	Outer Size	±5mm
		Thickness	±10%
		Printing position	±8mm
Date		21-Feb.-2025	
Maker		Ailsa Zhou	
Product Name		ESD MBB with folded bottom	
Customer P.N.		WHS-B-2007	
Drawing No.		DR-SP-ES-12175	
Version		A/0	

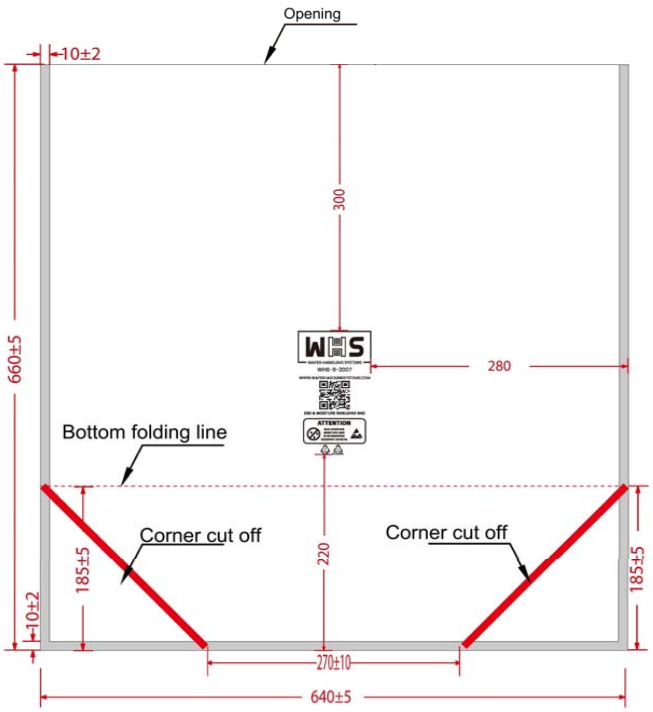

WAFER HANDLING SYSTEMS
www.sps-international.com
sales@sps-international.com
www.waferhandlingsystems.com
sales@waferhandlingsystems.com